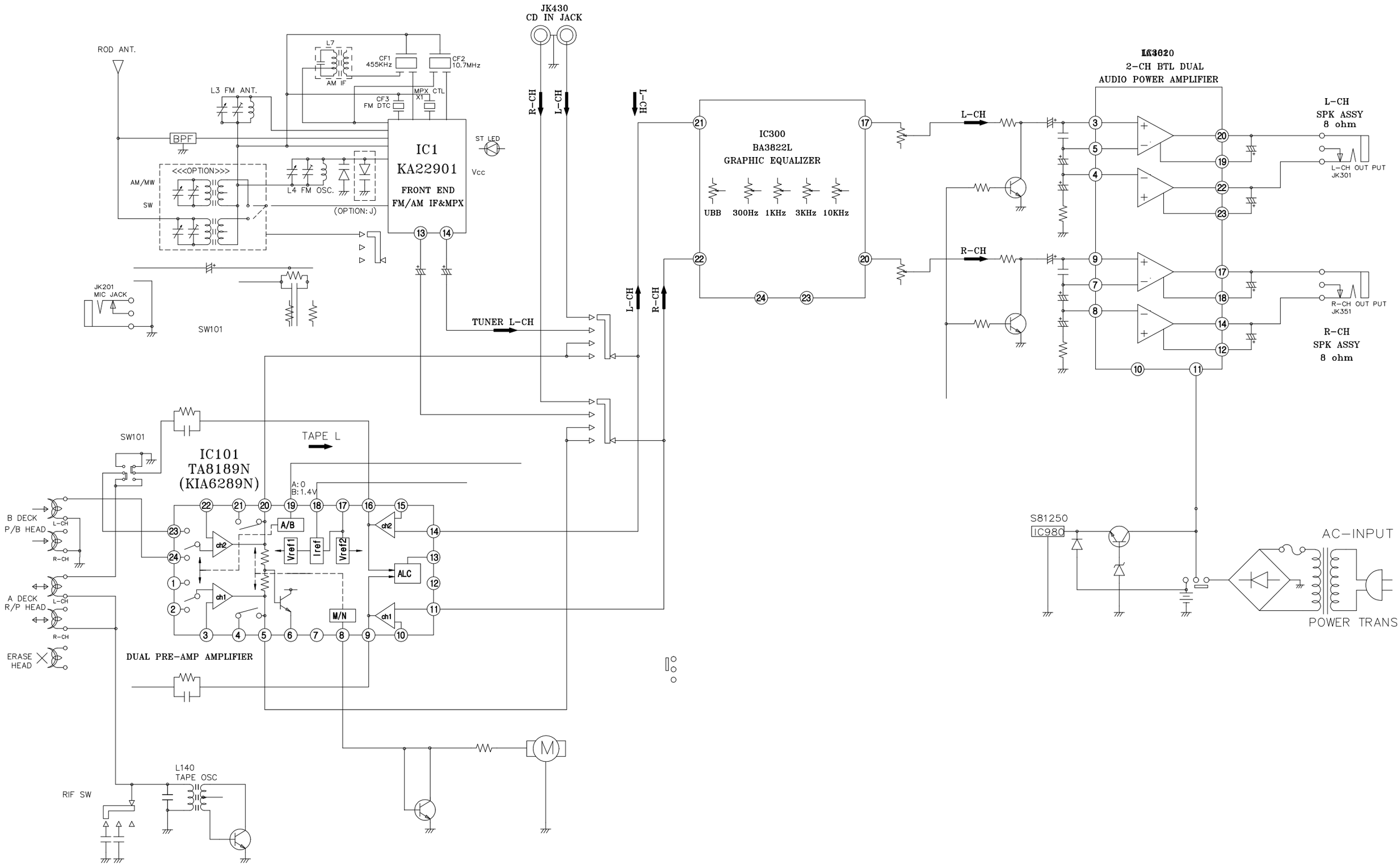
JK430
CD IN JACK
ROD ANT.
L7
CF1
455KHz
CF2
10.7MHz
AM IF
L3 FM ANT.
CF3
FM DTC
MPX CTL
X1
BPF
IC1
KA22901
FRONT END
FM/AM IF&MPX
ST LED
Vcc
<<<OPTION>>>
AM/MW
SW
L4 FM OSC.
(OPTION: J)
JK201
MIC JACK
SW101
TUNER L-CH
R-CH
L-CH
IC300
BA3822L
GRAPHIC EQUALIZER
UBB
300Hz
1KHz
3KHz
10KHz
IC3620
2-CH BTL DUAL
AUDIO POWER AMPLIFIER
L-CH
SPK ASSY
8 ohm
L-CH OUT PUT
JK301
R-CH OUT PUT
JK351
R-CH
SPK ASSY
8 ohm
SW101
TAPE L
IC101
TA8189N
(KIA6289N)
A:0
B:1.4V
A/B
Vref1
Iref
Vref2
ch2
ch1
ALC
M/N
B DECK
P/B HEAD
A DECK
R/P HEAD
ERASE
HEAD
DUAL PRE-AMP AMPLIFIER
S81250
IC980
AC-INPUT
POWER TRANS
L140
TAPE OSC
RIF SW
M